Contour 21+ Single Lever One Hole Basin Mixer With Pop-up Waste

ILLUSTRATED

BC119 Contour 21+ single lever one hole basin mixer with pop-up waste and copper tails

ILLUSTRATED PRODUCT DETAILS

Weights

BC119 1.91 KG

Materials

BC119 Chrome Plated Brass

Finishes

BC119 Chrome (AA)

Flow rates

BC119 5 Litres per minute @ 3 bar pressure

Designer

Artefakt Industriekultur

Standards

Manufactured in accordance to BS EN 817

Special Notes

Suitable for balanced supplies. Inlets 15mm copper tails. Consideration should be given to safe hot water delivery and the use of an appropriate temperature reduction device, please see A5900AA (for use with 15mm pipework) or A5901AA (for use with 22mm pipework). Fitted with a 5 litre per minute outlet flow regulator. Minimum pressure 1 bar.

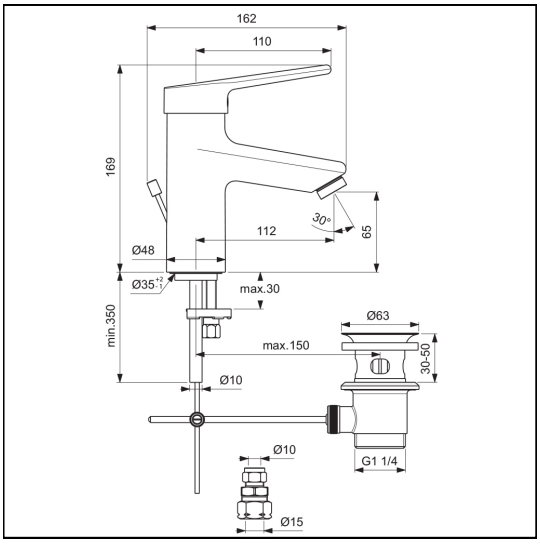

ACCREDITATIONS

FEATURES

Ideal Standard (UK) Ltd. makes every effort to ensure that the information provided on its website is accurate. However, we cannot guarantee this, and accept no liability for any information or advice given via its website.