Joy Neo Dual Control Exposed Manual Shower System

ILLUSTRATED

BD159 Joy Neo dual control exposed shower system with lever handles

ILLUSTRATED PRODUCT DETAILS

Weights

BD159 6.15 KG

Materials

BD159 PVD Coated Brass

Finishes

BD159 Chrome (AA)

Designer

Palomba Serafini Associati

FINISH OPTIONS

(AA) Chrome

(A5) Magnetic Grey

Special Notes

Consideration should be given to safe hot water delivery and the use of an appropriate temperature reduction device, please see A5900AA (for use with 15mm pipework) or A5901AA (for use with 22mm pipework).

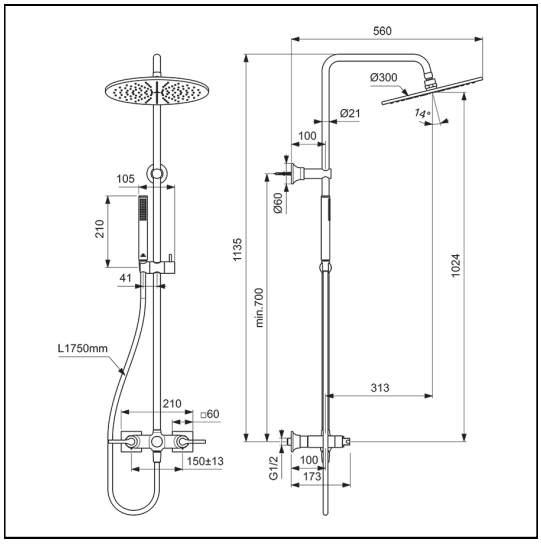

Ideal Standard (UK) Ltd. makes every effort to ensure that the information provided on its website is accurate. However, we cannot guarantee this, and accept no liability for any information or advice given via its website.

Ideal Standard