Ceraplan Single Lever High Cast Spout Kitchen Mixer

ILLUSTRATED

BD328 Ceraplan single lever high cast spout kitchen mixer

ILLUSTRATED PRODUCT DETAILS

Weights

BD328 2.61 KG

Materials

BD328 Chrome Plated Brass

Finishes

BD328 Chrome (AA)

Flow rates

BD328 5 Litres per minute @ 3 bar pressure

Designer

Palomba Serafini Associati

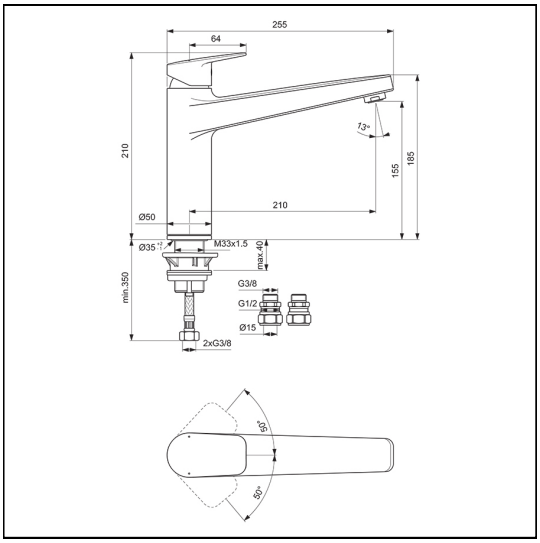

Ideal Standard (UK) Ltd. makes every effort to ensure that the information provided on its website is accurate. However, we cannot guarantee this, and accept no liability for any information or advice given via its website.

Ideal Standard