Concept 170cm x 75cm Idealform Bath 2 Tapholes

ILLUSTRATED

E7295	Concept 170cm x 75cm Idealform bath with 2 tapholes
E3194	Unilux 170cm front panel
E3195	Unilux 75cm end panel
S8970	Trap 1½" plastic P with 75mm seal, multi-purpose outlet suitable for plastic and BS copper pipe
E1486	Luxury bath pop-up waste and overflow
A5901	TMV thermostatic mixing valve, 22mm

OPTIONS

BD264	Ceraplan dual control bath filler

ILLUSTRATED PRODUCT DETAILS

Weights

E7295	21.00 KG
E3194	3.65 KG
E3195	2.58 KG
S8970	1.00 KG
A5901	0.60 KG

Materials

E7295	Idealform
E3194	High Impact Polystyrene
E3195	High Impact Polystyrene
S8970	Plastic
E1486	Mixed Material
A5901	Chrome Plated Metal

Finishes

E7295	White (01)
E3194	White (01)
E3195	White (01)
S8970	Neutral / No Finish (67)
E1486	Chrome (AA)
A5901	Chrome (AA)

Capacity

E7295	186.0 litres (to overflow)

Designer

Robin Levien, RDI

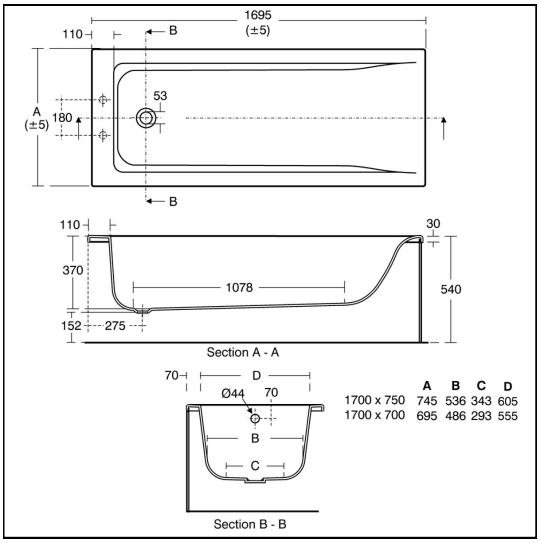

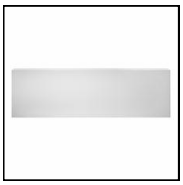

Standards

Constructed to EN 198:2008. EN 14516

Special Notes

Consideration should be given to safe hot water delivery and the use of an appropriate temperature reduction device, see A5901AA or Part G for guidance. One taphole fittings require offsetting from the overflow. Check positioning and compatibility before specifying.

ACCREDITATIONS

E7295(01)

Unified Water Label — 186.0 Litres

FEATURES

Ideal Standard (UK) Ltd. makes every effort to ensure that the information provided on its website is accurate. However, we cannot guarantee this, and accept no liability for any information or advice given via its website.

Ideal Standard