Contour 21+ Back To Wall Rimless Raised Height WC Pan - Enlarged Cubicle

ILLUSTRATED

S0440	Contour 21+ raised height back-to-wall rimless toilet bowl with raised horizontal outlet and anti-microbial glaze
S6454	Contour 21 grab rail straight 60cm long x 35mm diameter
S6452	Contour 21 grab rail straight 45cm long x 35mm diameter
S5093	Clothes hook screw to wall, plastic
S3326	Conceala 3 dual flush 6/4 litre cistern, side inlet, pneumatic actuation, easy adjustable to low water volumes (4.5/3 or 4/2.6 litres), internal overflow, flushpipe included, no button/flushplate
S4066	Contour 21 toilet seat only, top fixing hinges and retaining buffers
S1082	Conceala 3 dual flushplate

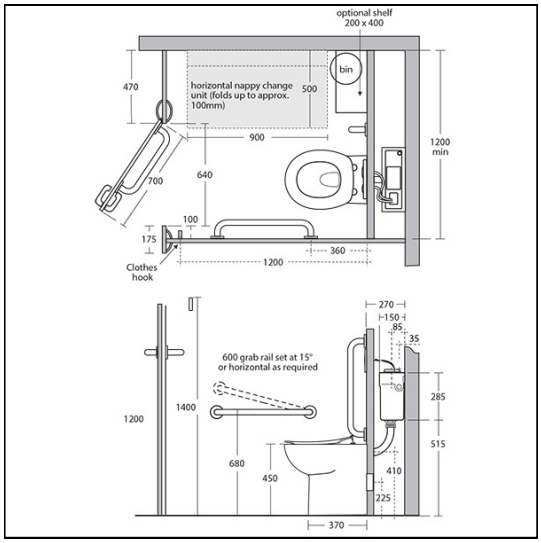

OPTIONS

S3330	Conceala 3 single flush 6 litre cistern, bottom/top inlet, lever operated, easy adjustable to low water volumes (4.5 or 4 litres), internal overflow, flushpipe included, no lever
S4305	Panekta outlet connector to convert horizontal outlet wcs to P trap
S4300	Panekta outlet connector to convert horizontal outlet wcs to S or turned P trap

ILLUSTRATED PRODUCT DETAILS

Weights

S0440	22.70 KG
S6454	2.00 KG
S6452	0.62 KG
S5093	1.76 KG
S3326	2.70 KG
S4066	1.55 KG
S1082	0.35 KG

Materials

S0440	Vitreous China
S6454	Aluminium
S6452	Aluminium
S5093	Vitreous China
S3326	Plastic
S4066	Plastic
S1082	Chrome Plated Plastic

Finishes

S0440	White with SmartGuard (HY)
S6454	White (AC)
S6452	White (AC)
S5093	White (AC)
S3326	Neutral / No Finish (67)
S4066	White (01)
S1082	Chrome (AA)

Designer

Robin Levien, RDI

ACCREDITATIONS

FINISH OPTIONS

(36) Blue

(AC) White

(LJ) Grey

(MY) Stainless Steel finish

(RN) Charcoal

(GQ) Red

Ideal Standard (UK) Ltd. makes every effort to ensure that the information provided on its website is accurate. However, we cannot guarantee this, and accept no liability for any information or advice given via its website.

Contour 21+ Back To Wall Rimless Raised Height WC Pan - Enlarged Cubicle

(LI) Blue

(01) White

(V3) Silk Black

(AA) Chrome

(MY) Stainless Steel finish

(A6) Black

Standards

Vitreous china to BS 3402

Special Notes

Where four or more cubicles are provided in a washroom one of these must be an enlarged cubicle. This cubicle must be in addition to the ambulant disabled cubicle (see page 18:3:13) and must be a minimum of 1200mm wide. One horizontal and one vertical grab rail must be supplied to set around the WC.There must also be a space for a shelf and folding changing table, an outward opening door and closing/opening bar on the inside of the door. Supplied with layout drawings, detailing the fixing positions necessary for Doc M compliance.
600mm grab rail S6454 x 2 for room set 450mm grab rail S6452 for back of door
White:Ral=9016, LRV=87
Blue:Ral=5011, LRV=6
Red:Ral=3020, LRV=12
Grey:Ral=7005, LRV=19
Charcoal:Ral=7016, LRV=8

Ideal Standard (UK) Ltd. makes every effort to ensure that the information provided on its website is accurate. However, we cannot guarantee this, and accept no liability for any information or advice given via its website.