Edit R 38cm Countertop Washbasin

ILLUSTRATED

S0789	Edit R 38cm Countertop Washbasin, 1 taphole with overflow
BC710	Edit R rim mounted single lever basin mixer - with clicker waste
S8910	Trap 1¼" plastic bottle, 75mm seal, multi-purpose outlet

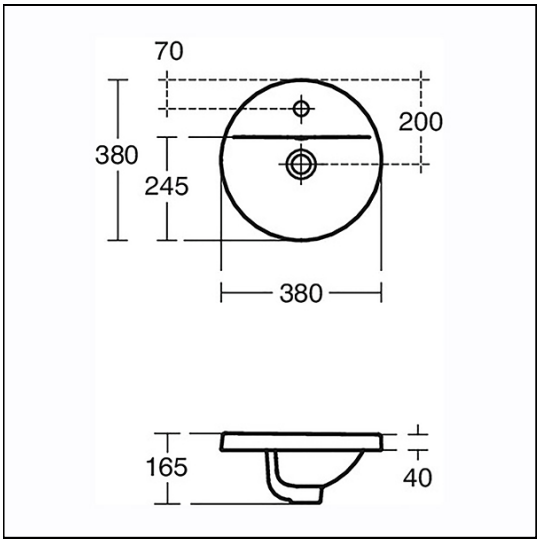

ILLUSTRATED PRODUCT DETAILS

Sizes

S0789 w:380

Weights

S0789 7.00 KG
BC710 1.40 KG
S8910 0.20 KG

Materials

S0789 Vitreous China
BC710 Chrome Plated Brass
S8910 Plastic

Finishes

S0789 White (01)

BC710 Chrome finish (AA)

S8910 Neutral / No Finish (67)

Capacity

S0789 1.5 litres

Flow rates

BC710 5 Litres per minute @ 3 bar pressure

Designer

Robin Levien, RDI

Standards

Washbasin to BS EN 14688 and BS EN 31

Special Notes

Self rimming for drop-in installation as per template supplied. Joint sealed with waterproof sealant (not supplied). Consideration should be given to safe hot water delivery and the use of an appropriate temperature reduction device (see A5900AA or Part G for guidance).

FEATURES

Ideal Standard (UK) Ltd. makes every effort to ensure that the information provided on its website is accurate. However, we cannot guarantee this, and accept no liability for any information or advice given via its website.