Nisa Steel Bath 170cm No Taphole Handgrips

ILLUSTRATED

S1864	Nisa 170cm x 70cm steel bath, no tapholes with chrome plated handgrips
B3309	Sandringham SL 21 2 hole bath filler
S0915	Bath flat front panel
S0916	Bath flat end panel
S9365	Bath panel plastic corner edge strip
S8970	Trap 1½" plastic P with 75mm seal, multi-purpose outlet suitable for plastic and BS copper pipe
S8830	Waste 1½" bath chain and overflow, plastic plug
A5901	TMV thermostatic mixing valve, 22mm
B9308	Armaglide 2 shower set with single function handspray, 1750mm idealflex smooth hose, wall mounted holder and category 5 hose retainer

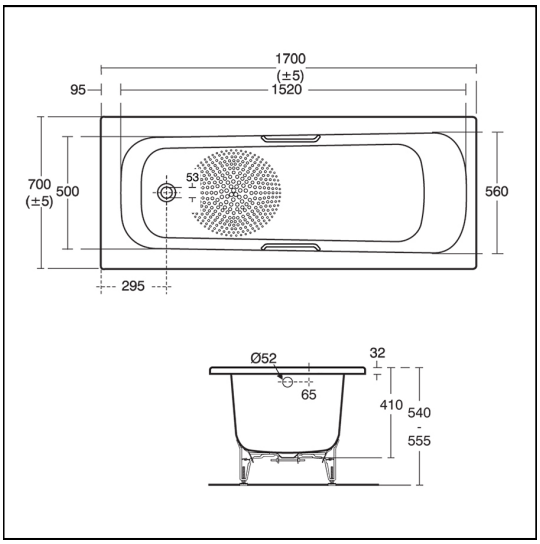

OPTIONS

B9306	Armaglide 2 shower kit with single function handspray, 900mm rail, 1750mm smooth hose and category 5 hose retainer
A4129	Contour 21 thermostatic built-in shower mixer, lever operated

ILLUSTRATED PRODUCT DETAILS

Weights

S1864	48.00 KG
B3309	1.68 KG
S0915	2.14 KG
S0916	3.50 KG
S9365	0.01 KG
S8970	1.00 KG
S8830	1.78 KG
A5901	0.60 KG
B9308	1.00 KG

Materials

S1864	Porcelain Enamelled Steel
B3309	Chrome Plated Brass
S0915	High Impact Polystyrene
S0916	High Impact Polystyrene
S9365	Plastic
S8970	Plastic
S8830	Mixed Material
A5901	Chrome Plated Metal
B9308	Chrome Plated Metal

Finishes

S1864	White (01)
B3309	Chrome (AA)
S0915	White (01)
S0916	White (01)
S9365	White (01)
S8970	Neutral / No Finish (67)
S8830	Chrome (AA)
A5901	Chrome (AA)
B9308	Chrome (AA)

Capacity

S1864	169.0 litres (to overflow)

Flow rates

B3309	70 Litres per minute @ 3 bar pressure
B9308	8 Litres per minute @ 3 bar pressure

Standards

ACCREDITATIONS

S1864(01)

Unified Water Label — 169.0 Litres

B9306(AA)

Unified Water Label — 8.00 Litres Per Minute

B9308(AA)

Unified Water Label — 8.00 Litres Per Minute

A4129(AA)

Unified Water Label — 7.50 Litres Per Minute

B3309(AA)

Unified Water Label — 70.00 Litres Per Minute

FEATURES

Ideal Standard (UK) Ltd. makes every effort to ensure that the information provided on its website is accurate. However, we cannot guarantee this, and accept no liability for any information or advice given via its website.

Nisa Steel Bath 170cm No Taphole Handgrips

BS 1390:1990. EN 14516

Special Notes

*Anti-slip is a resistant finish that reduces the chances of slipping, it does not prevent all slipping. Not suitable in areas involving the use of special chemicals. Framework is required at installation to support Not suitable in areas involving the use of special chemicals. Framework is required at installation to support rim and secure panel. Panels require trimming to size at installation. Consideration should be given to safe hot water delivery and the use of an appropriate temperature reduction device, see A5901AA or Part G for guidance.

Ideal Standard (UK) Ltd. makes every effort to ensure that the information provided on its website is accurate.
However, we cannot guarantee this, and accept no liability for any information or advice given via its website.