# Portman 21 Washbasin 60cm No Taphole, Chainstay Or Overflow

## ILLUSTRATED

| | |
|---|---|
| **S2255** | Portman 21 washbasin 60cm, no tapholes no overflow no chainstay hole |
| **S7423** | Contour 2 wall mounted single control concealed washbasin mixer with quarter turn ceramic disc operation, 230mm projection spout with alternative aerator or flow straightener outlet, rigid copper tails integral combined filter and regulating valves |
| **S8720** | Waste 1¼" brass strainer waste, 80mm unslotted tail |
| **S8920** | Trap 1¼" plastic resealing bottle, 75mm seal, multi-purpose outlet |

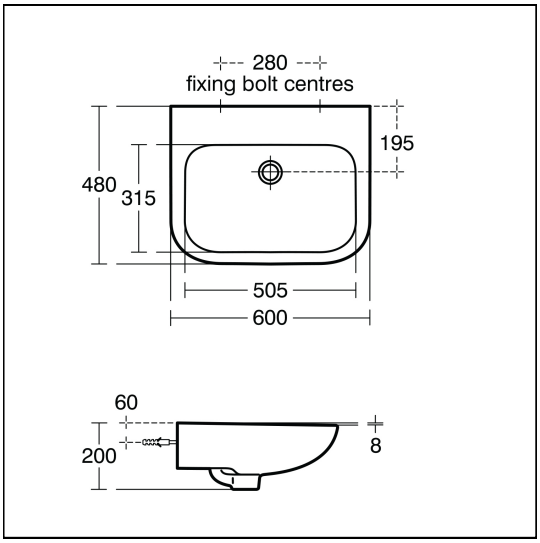


## OPTIONS

| | |
|---|---|
| **E0157** | Wall fixing set |
| **E0062** | Basin fixing set for IPS panels or block walls |
| **S7241** | Avon non concussive self closing bib tap |
| **A5900** | TMV thermostatic mixing valve, 15mm |
| **S8910** | Trap 1¼" plastic bottle, 75mm seal, multi-purpose outlet |
| **S9137** | Bracket concealed with clamps and centre waste support for Portman 21 washbasins 60 and 50cm |

## ILLUSTRATED PRODUCT DETAILS

### Sizes

| | |
|---|---|
| **S2255** | w:60 x d:48 |

### Weights

| | |
|---|---|
| **S2255** | 16.79 KG |
| **S7423** | 1.00 KG |
| **S8720** | 0.23 KG |
| **S8920** | 2.00 KG |

### Materials

| | |
|---|---|
| **S2255** | Vitreous China |
| **S7423** | Chrome Plated Brass |
| **S8720** | Chrome Plated |
| **S8920** | Plastic |

### Finishes

| | |
|---|---|
| **S2255** | White (01) |
| **S7423** | Chrome (AA) |
| **S8720** | Chrome (AA) |
| **S8920** | Neutral / No Finish (67) |



Ideal Standard (UK) Ltd. makes every effort to ensure that the information provided on its website is accurate. However, we cannot guarantee this, and accept no liability for any information or advice given via its website.