Contour 21 37Cm Hand Rinse Washbasin RH Taphole No Overflow Or Chain Hole

ILLUSTRATED

S2474	Contour 21 37cm handrinse washbasin right hand taphole no overflow or chainstay hole, bottom outlet
S9110	Hangers concealed, Steel
A6697	Contour 21+ 1 hole thermostatic basin mixer, single sequential lever with copper tails
S8720	Waste 1¼" brass strainer waste, 80mm unslotted tail
S8910	Trap 1¼" plastic bottle, 75mm seal, multi-purpose outlet

OPTIONS

A6698	Contour 21+ 1 hole thermostatic basin mixer, single sequential lever with flexible tails
A6790	Contour 21+ Outline 1 hole thermostatic basin mixer, single sequential lever with flexible tails
S8810	Waste 1¼" plastic strainer, dished pattern 80mm unslotted tail

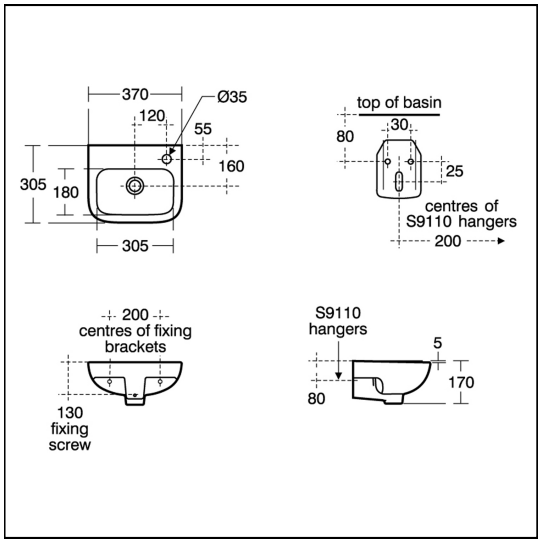

ILLUSTRATED PRODUCT DETAILS

Sizes

S2474	w:370 x d:300

Weights

S2474	7.50 KG
S9110	0.24 KG
A6697	2.10 KG
S8720	0.23 KG
S8910	0.20 KG

Materials

S2474	Vitreous China
S9110	Metal
A6697	Chrome Plated Brass
S8720	Chrome Plated
S8910	Plastic

Finishes

S2474	White (01)
S9110	Neutral / No Finish (67)
A6697	Chrome (AA)
S8720	Chrome (AA)
S8910	Neutral / No Finish (67)

Flow rates

A6697	3.9 Litres per minute @ 3 bar pressure

Standards

Washbasin to BS EN 14688 and BS EN 31

FEATURES

E: info@idealspec.co.uk | T: 0870 122 8822 | F: 0870 122 8282 | www.idealspec.co.uk

Ideal Standard (UK) Ltd. makes every effort to ensure that the information provided on its website is accurate. However, we cannot guarantee this, and accept no liability for any information or advice given via its website.