Contour 21 Splash Schools Wall Hung Toilet

ILLUSTRATED

S3127	Contour 21 Splash 355mm wall hung rimless bowl with horizontal outlet
S3326	Conceala 3 dual flush 6/4 litre cistern, side inlet, pneumatic actuation, easy adjustable to low water volumes (4.5/3 or 4/2.6 litres), internal overflow, flushpipe included, no button/flushplate
S4545	Contour 21 Splash toilet seat only for 355mm bowls
S1082	Conceala 3 dual flushplate
E0060	Support frame with bolts for wall mounted toilet bowls

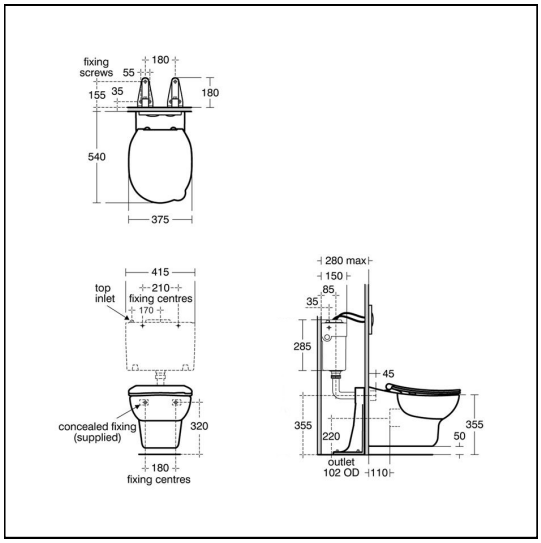

OPTIONS

S1347	Conceala 3 single flush 6 litre cistern, side inlet, lever operated, easy adjustable to low water volumes, internal overflow, flushpipe and lever included
S4536	Contour 21 Splash toilet seat and cover for 355mm bowls
S1084	Conceala 3 pneumatic dual flush finger push button
S4305	Panekta outlet connector to convert horizontal outlet wcs to P trap

ILLUSTRATED PRODUCT DETAILS

Weights

S3127	19.00 KG
S3326	2.70 KG
S4545	1.20 KG
S1082	0.35 KG
E0060	4.28 KG

Materials

S3127	Vitreous China
S3326	Plastic
S4545	Plastic
S1082	Chrome Plated Plastic
E0060	Metal

Finishes

S3127	White (01)
S3326	Neutral / No Finish (67)
S4545	White (01)
S1082	Chrome (AA)
E0060	Neutral / No Finish (67)

Designer

Robin Levien, RDI

FINISH OPTIONS

(79) yellow

(GQ) Red

(36) Light Blue

(01) White

(AA) Chrome

(MY) Stainless Steel finish

(A6) Black

Standards

WC bowl to BS EN 997 & BS EN 33

Special Notes

Ideal Standard (UK) Ltd. makes every effort to ensure that the information provided on its website is accurate. However, we cannot guarantee this, and accept no liability for any information or advice given via its website.

Contour 21 Splash Schools Wall Hung Toilet

E0060 support brackets secured to floor within the duct.
WC fixed to support brackets within hidden fixation set provided.

Ideal Standard (UK) Ltd. makes every effort to ensure that the information provided on its website is accurate.
However, we cannot guarantee this, and accept no liability for any information or advice given via its website.