# Doon Sink 60x65cm Single Bowl, 2 Taphole

## ILLUSTRATED

| | |
|---|---|
| **S6001** | Doon sink, single bowl 60 x 65cm, 2 tapholes HTM63 Profile |
| **S8265** | Markwik ½" lever action high neck pillar taps |
| **S8768** | Waste 1½" unslotted chain waste, plug and screw stay, 90mm tail |
| **S8925** | Trap 1½" plastic resealing bottle with 75mm seal, multi-purpose outlet |

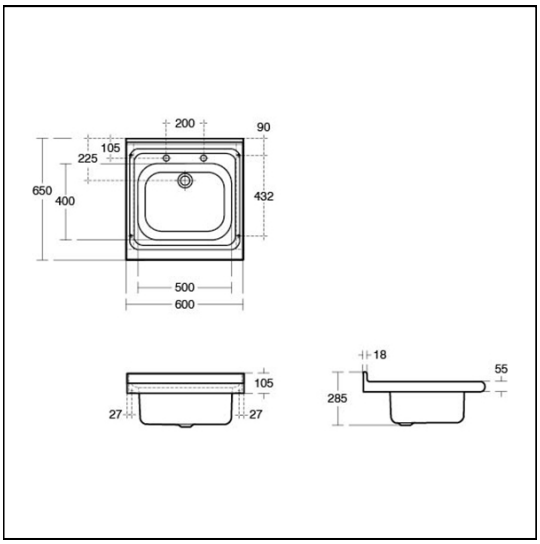


## OPTIONS

| | |
|---|---|
| **S9281** | Leg 900mm stainless steel to floor (2 required) |
| **S8760** | Waste 1½" unslotted strainer waste, 50mm long, 75mm dia. brass |
| **S8915** | Trap 1½" plastic bottle with 75mm seal, multi-purpose outlet |

## ILLUSTRATED PRODUCT DETAILS

### Weights

| | |
|---|---|
| **S6001** | 8.70 KG |
| **S8265** | 2.29 KG |
| **S8768** | 0.39 KG |
| **S8925** | 0.33 KG |

### Materials

| | |
|---|---|
| **S6001** | Stainless Steel |
| **S8265** | Chrome Plated Brass |
| **S8768** | Chrome Plated Metal |
| **S8925** | Plastic |

### Finishes

| | |
|---|---|
| **S6001** | Stainless Steel finish (MY) |
| **S8265** | Chrome (AA) |
| **S8768** | Chrome (AA) |
| **S8925** | Neutral / No Finish (67) |

### Standards

Stainless steel sheet to BS EN 10088: Part 2: 2005. Conforms to Metal sinks BS EN 13310



Ideal Standard (UK) Ltd. makes every effort to ensure that the information provided on its website is accurate. However, we cannot guarantee this, and accept no liability for any information or advice given via its website.