Concept Freedom Shower Pack - Individual Items

ILLUSTRATED

S6408	Concept Freedom Shower seat
S6362	Contemporary 21 hinged support rail, 80cm Doc M Compliant
S6409	Concept Freedom 40cm chrome rail for shower seat
A6290	Freedom exposed thermostatic shower system with pin handles, Idealrain M1 rainshower, fixed riser, M3 3 function handspray and 1.8m Ideaflex hose

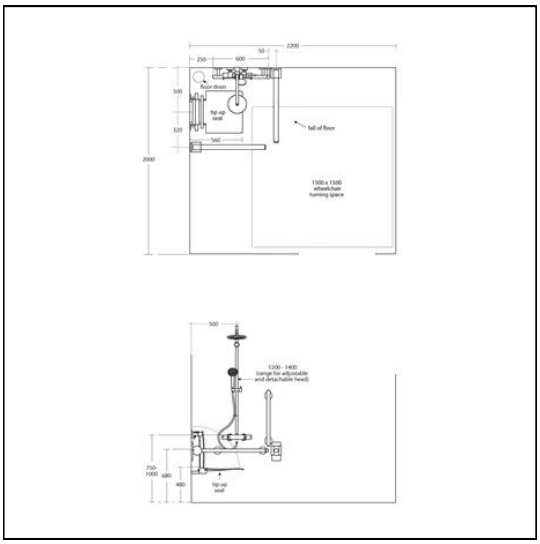

OPTIONS

S0830	Contour 21 Contemporary grab rail 60cm long

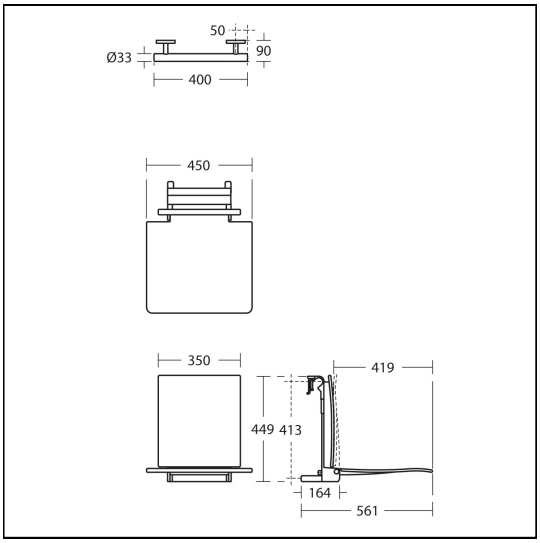

ILLUSTRATED PRODUCT DETAILS

Weights

S6408	13.50 KG
S6362	3.00 KG
S6409	1.74 KG
A6290	6.50 KG

Materials

S6362	Aluminium
A6290	Chrome Plated Brass

Finishes

S6408	Grey (LJ)
S6362	Chrome finish (AA)
S6409	Chrome finish (AA)
A6290	Chrome (AA)

Flow rates

A6290	12 Litres per minute @ 3 bar pressure

FINISH OPTIONS

(AA) Chrome finish

(MY) Stainless Steel finish

Ideal Standard (UK) Ltd. makes every effort to ensure that the information provided on its website is accurate. However, we cannot guarantee this, and accept no liability for any information or advice given via its website.

Ideal Standard